Marchio / Brand ZUCCHETTI

Classe / Class WW

HELM

Z92256.X Bocca di erogazione. / Wall spout.



Bocca di erogazione in acciaio inox AISI 316L. Lunghezza 230 mm.

Wall spout in AISI 316L stainless steel. L. 230 mm.

Marchio / Brand ZUCCHETTI

Classe / Class WW

HELM

Z92256.X

Finiture / Finishes



X

Acciaio inox spazzolato / Brushed stainless steel



XP21

Brushed PVD chocolate / Brushed PVD chocolate



XP31

Brushed PVD British gold / Brushed PVD British gold



XP41

Brushed PVD gold / Brushed PVD gold



XP81

PVD Brushed Total Black / PVD Brushed Total Black



XP91

Brushed PVD copper / Brushed PVD copper

Note / Notes

HELM

Z92256.X Disegno Complessivo / Overall Drawing

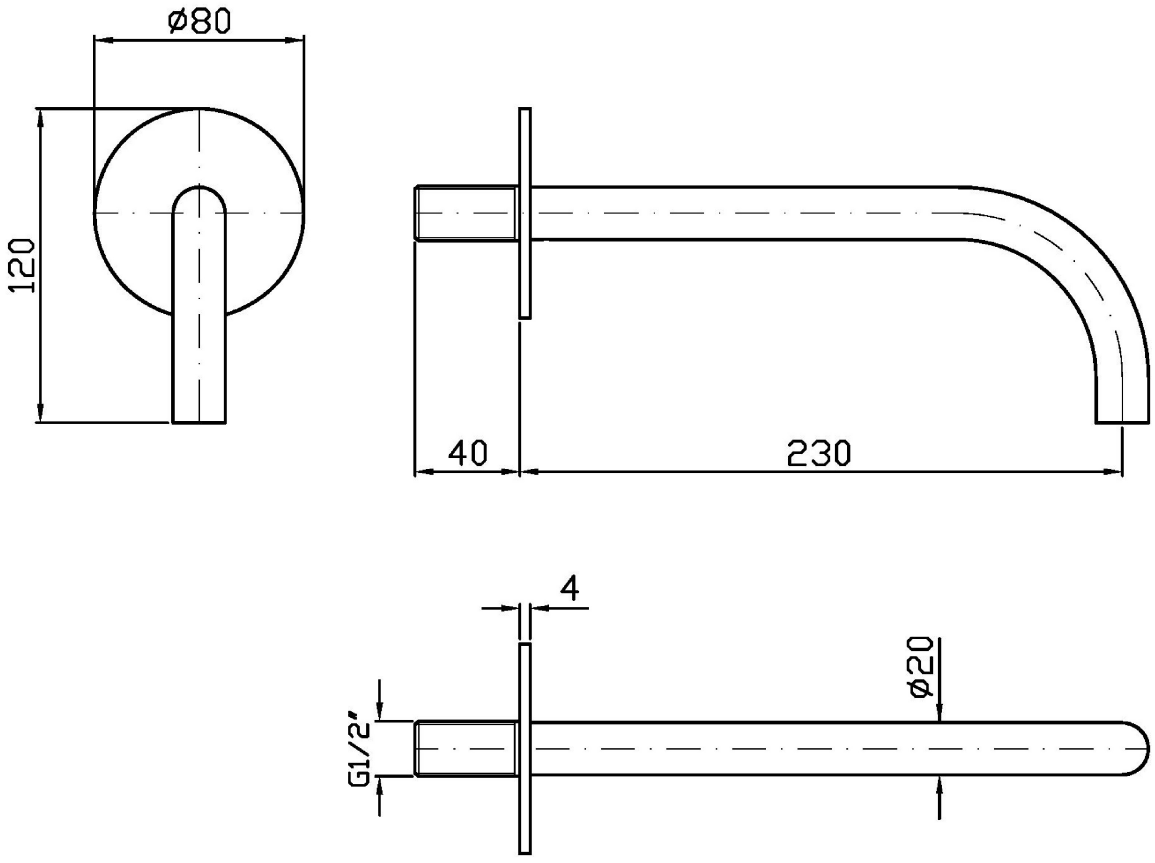

HELM

Z92256.X Portate / Flowrates (lt/min)

PRESSIONE PRESSURE	1 BAR	2 BAR	3 BAR	4 BAR	5 BAR
P1 BOCCA VASCA WALL SPOUT	**34**	**45**	**52**	**58**	**64**
P2					
P3					
P4					
P5					

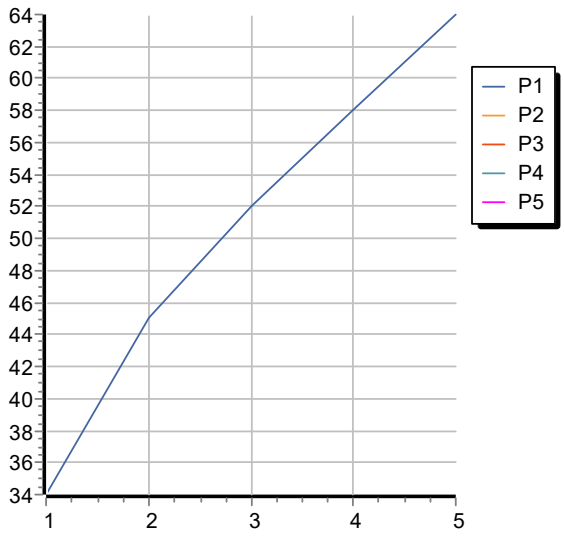

HELM

Z92256.X Pesi e Misure / Weights and Sizes

Peso (Kg) Weight (lb)	0,75 (Kg)	1,65 (lb)
Volume test (dc3) - (in3)	1,96 (dc3)	119,61 (in3)
h (mm) - (in)	30,00 (mm)	1,18 (in)
L1 (mm) - (in)	190,00 (mm)	7,48 (in)
L2 (mm) - (in)	345,00 (mm)	13,58 (in)

