Marchio / Brand ZUCCHETTI

Classe / Class WW

SABLIER

Z92265.X Bocca di erogazione. / Wall spout.



Bocca di erogazione in acciaio inox AISI 316L. Lunghezza 165 mm.

Wall spout in AISI 316L stainless steel. L. 165 mm.

Marchio / Brand ZUCCHETTI

Classe / Class WW

SABLIER

Z92265.X

Finiture / Finishes



X

Acciaio inox spazzolato / Brushed stainless steel



XP21

Brushed PVD chocolate / Brushed PVD chocolate



XP31

Brushed PVD British gold / Brushed PVD British gold



XP41

Brushed PVD gold / Brushed PVD gold



XP81

PVD Brushed Total Black / PVD Brushed Total Black



XP91

Brushed PVD copper / Brushed PVD copper



XS

Acciaio inox matt / Matt stainless steel



XSP21

Matt PVD chocolate / Matt PVD chocolate



XSP31

Matt PVD British gold / Matt PVD British gold



XSP41

Matt PVD gold / Matt PVD gold



XSP81

Matt PVD total black / Matt PVD total black



XSP91

Matt PVD copper / Matt PVD copper

Note / Notes

SABLIER

Z92265.X Disegno Complessivo / Overall Drawing

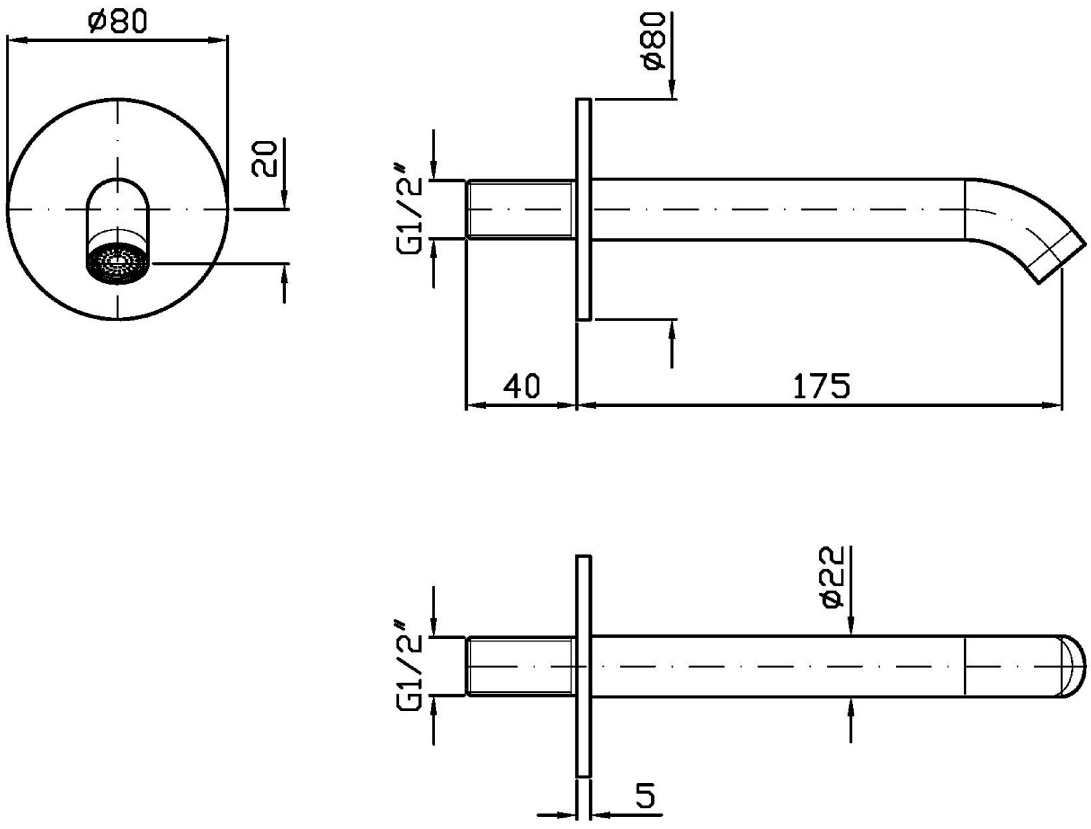

SABLIER

Z92265.X Portate / Flowrates (lt/min)

PRESSIONE PRESSURE	1 BAR	2 BAR	3 BAR	4 BAR	5 BAR
P1 BOCCA VASCA WALL SPOUT	**11,5**	**16,5**	**20,3**	**23,5**	**26,4**
P2					
P3					
P4					
P5					

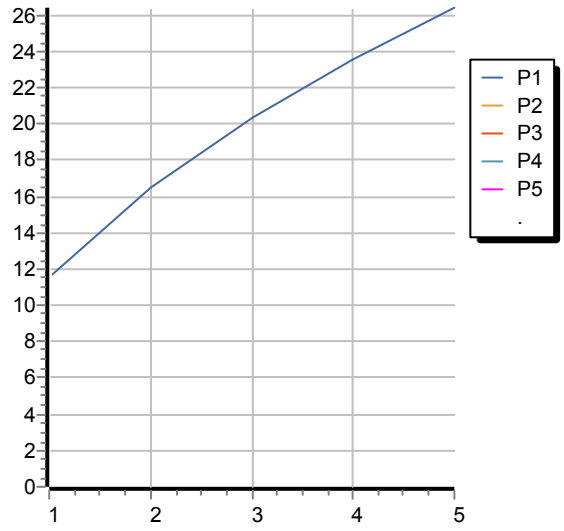

SABLIER

Z92265.X Pesi e Misure / Weights and Sizes

Peso (Kg) Weight (lb)	0,55 (Kg)	1,21 (lb)
Volume test (dc3) - (in3)	1,15 (dc3)	70,18 (in3)
h (mm) - (in)	45,00 (mm)	1,77 (in)
L1 (mm) - (in)	134,00 (mm)	5,28 (in)
L2 (mm) - (in)	190,00 (mm)	7,48 (in)

