Marchio / Brand ZUCCHETTI

Classe / Class WW

# AGORÀ

ZAG406 Batteria lavabo a 3 fori bocca fissa. / 3 hole basin mixer fixed spout.



Batteria lavabo a 3 fori bocca fissa, con aeratore, scarico da 1 ¼", flessibili di collegamento.

3 hole basin mixer fixed spout with aerator, 1 ¼" pop-up waste, flexible tails.

Marchio / Brand ZUCCHETTI

Classe / Class WW

# AGORÀ

ZAG406

## Finiture / Finishes



Cromo / Chrome



**P21**

PVD brushed chocolate / PVD brushed chocolate



**P30**

British Gold PVD / British Gold PVD



**P31**

Brushed PVD British gold / Brushed PVD British gold



**P60**

Platino PVD / Platinum PVD

Note / Notes

# AGORÀ

ZAG406 Disegno Complessivo / Overall Drawing

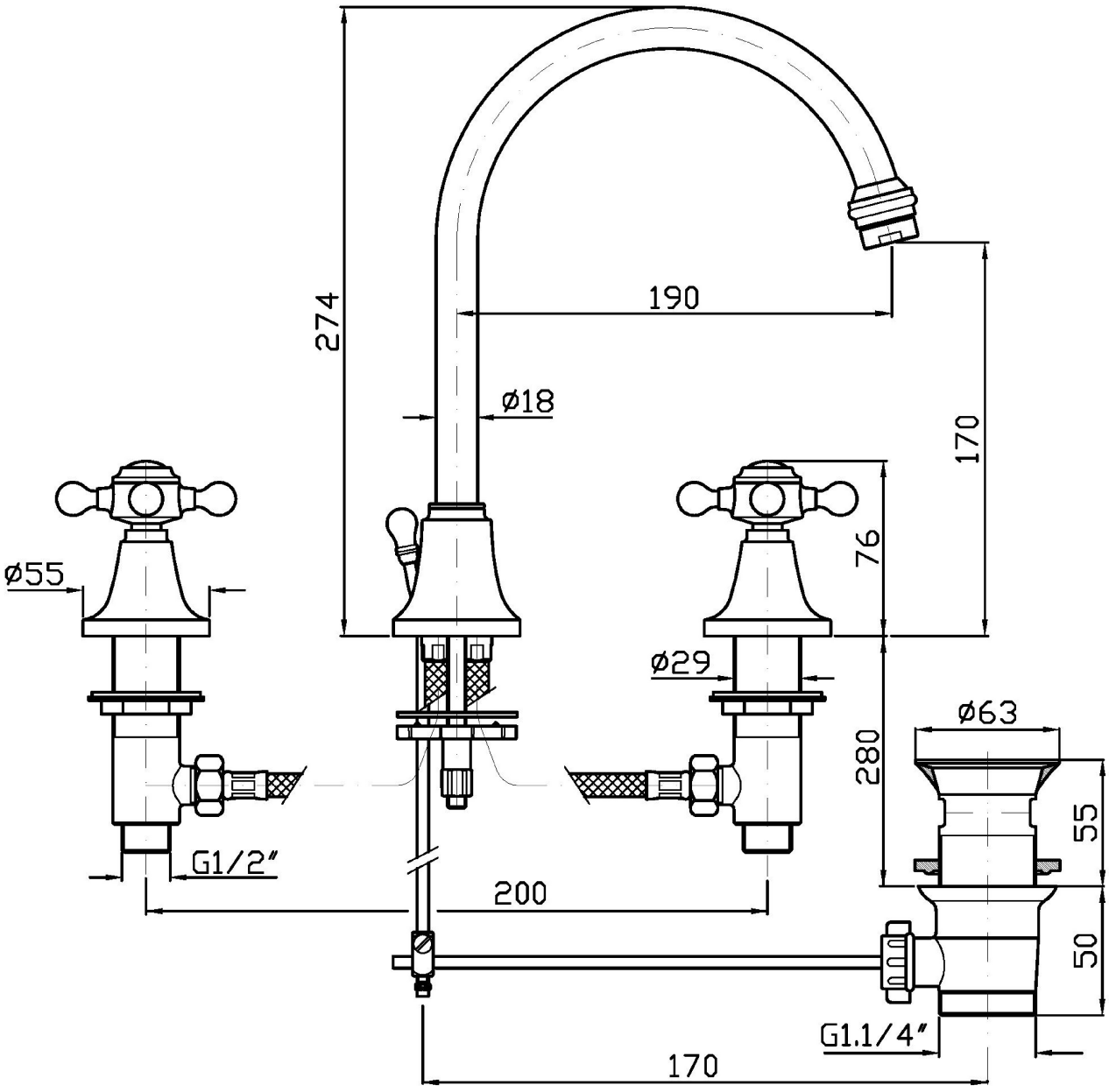

# AGORÀ

ZAG406 Esplosi / Exploded

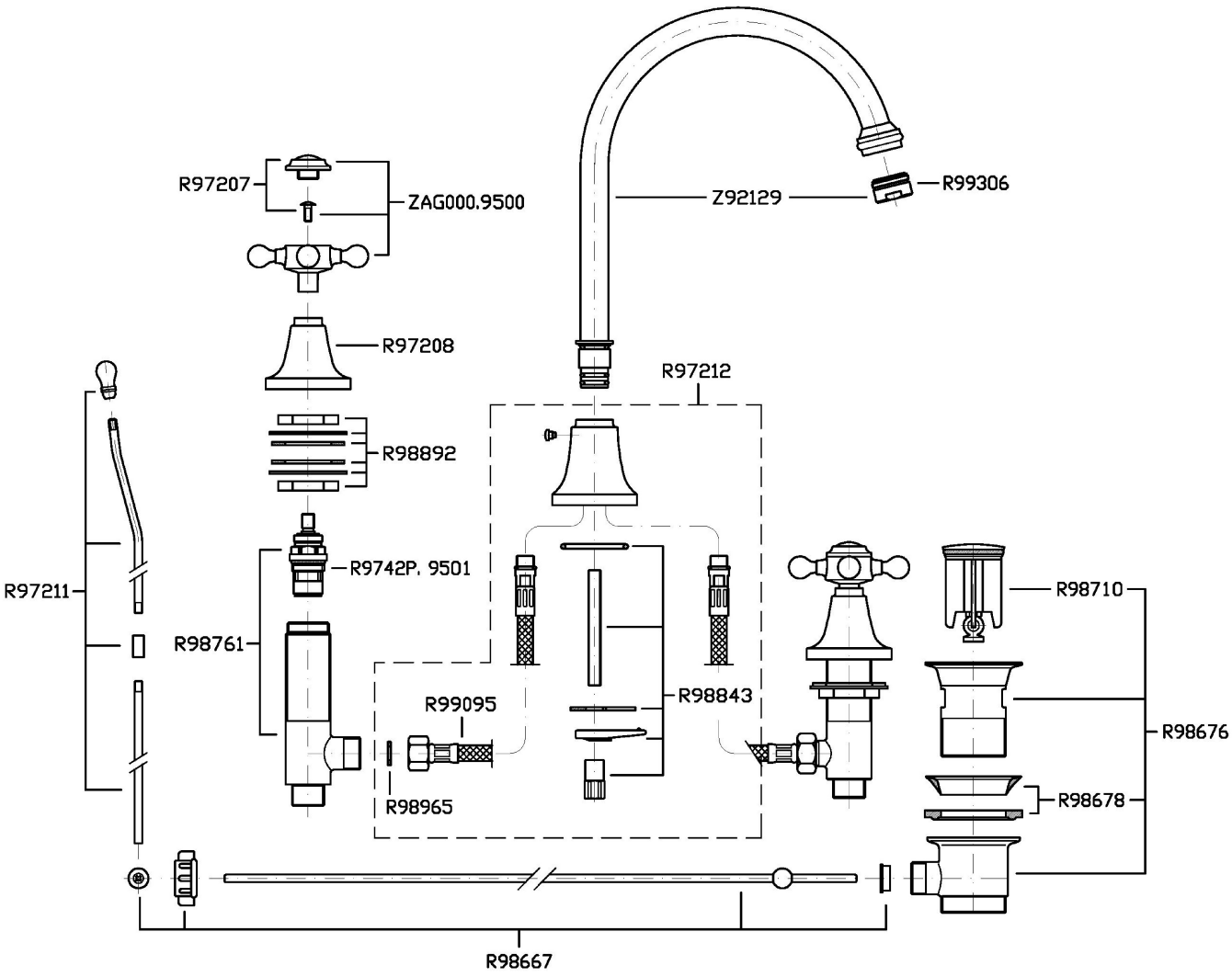

# AGORÀ

## ZAG406 Portate / Flowrates (lt/min)

| PRESSIONE PRESSURE | 1 BAR | 2 BAR | 3 BAR | 4 BAR | 5 BAR |
|---|---|---|---|---|---|
| P1 LAVABO BASIN | **7,8** | **11,2** | **14** | **16,2** | **18,2** |
| P2 | | | | | |
| P3 | | | | | |
| P4 | | | | | |
| P5 | | | | | |

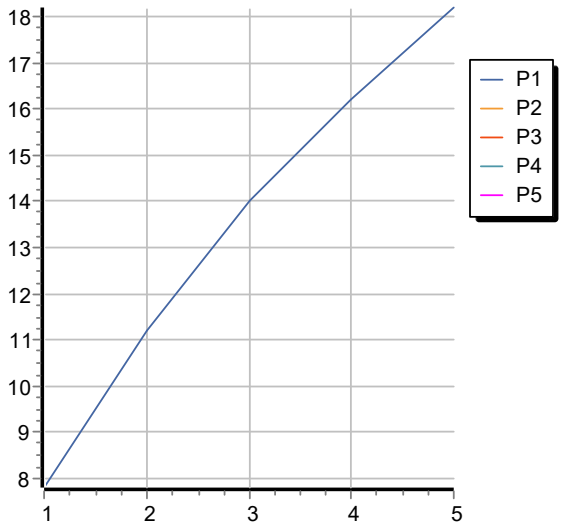


# AGORÀ

## ZAG406 Pesi e Misure / Weights and Sizes

| | | |
|---|---|---|
| Peso ( Kg ) Weight ( lb ) | 3,60 ( Kg ) | 7,94 ( lb ) |
| Volume test ( dc3 ) - ( in3 ) | 11,01 ( dc3 ) | 671,87 ( in3 ) |
| h ( mm ) - ( in ) | 90,00 ( mm ) | 3,54 ( in ) |
| L1 ( mm ) - ( in ) | 335,00 ( mm ) | 13,19 ( in ) |
| L2 ( mm ) - ( in ) | 365,00 ( mm ) | 14,37 ( in ) |

